ANEST IWATA

Spray Guns

LPH94

Ref #	Part #	Description	Remarks
1	03876530	BODY SET	
1-1	03650530	FLUID NIPPLE	
1-2	03649530	AIR NIPPLE	
2	93877530	AIR CAP SET 161 (1.3 1.4 1.6 1.8)	
2	93811531	AIR CAP SET 142	
3	93681530	FLUID NOZZLE 1.3	
3	93665530	FLUID NOZZLE 1.4	
3	93655530	FLUID NOZZLE 1.6	
3	93661530	FLUID NOZZLE 1.8	
4	93881530	SPREAD ADJ. VALVE SET	
4-1	03843240	STOP RING	
4-2*		O RING (SUPPLIED AS 501)	
4-3	03623362	SPREAD ADJ. GUIDE	
4-5	03624360	SPREAD ADJ.SPRING	
5*		O RING (SUPPLIED AS 501)	
6	03564340	FLUID NEEDLE GUIDE	
7	93507501	FLUID NEEDLE SET 1.2	FOR 1.3
7	93508501	FLUID NEEDLE SET 1.5	FOR 1.4 THRU 1.6
7	93509501	FLUID NEEDLE SET 2.0	FOR 1.8
8	03569340	FLUID NEEDLE SPRING	
9	03554530	LOCK NUT	
10	03602341	FLUID ADJ.KNOB	
11	03830340	AIR VALVE SEAT SET	
11-4*		O RING (SUPPLIED AS 501)	
12	03581340	AIR VALVE	
13	03088050	AIR VALVE SPRING	
14	03593340	AIR VALVE SPRING SEAT	
15*	03800540	NEEDLE PACKING SET	
16	03667340	TRIGGER STUD	
17	03656530	TRIGGER	
18	03842240	STOP RING (2PK)	
19	06990600	CLEANING BRUSH	
20	03780341	SPANNER	
21	03515500	FILTER	
501	03840341	O RING SET	
*****	5250	LPH 94 SERVICE KIT	
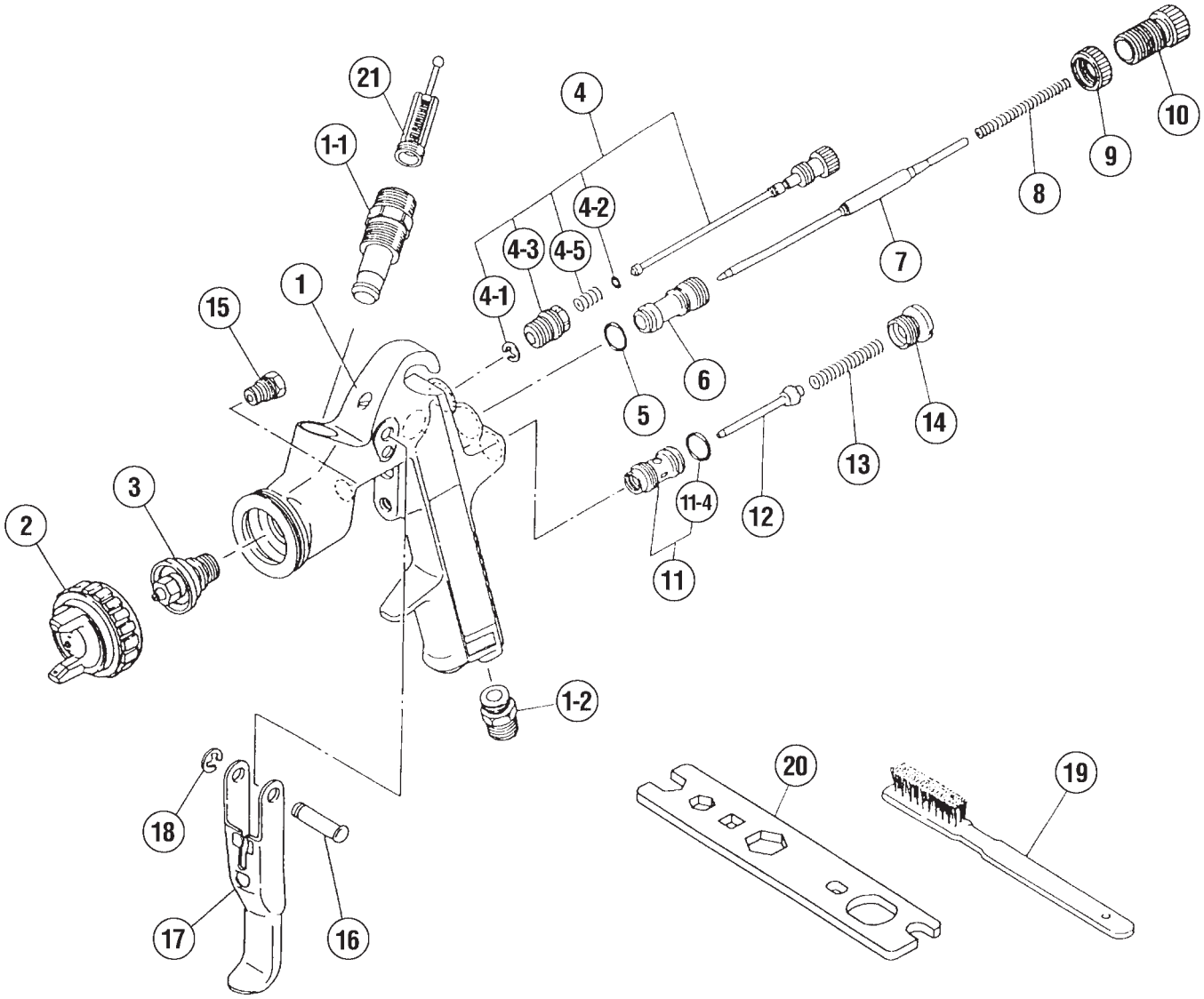
LPH94